MANUAL INSTRUCTION

deante

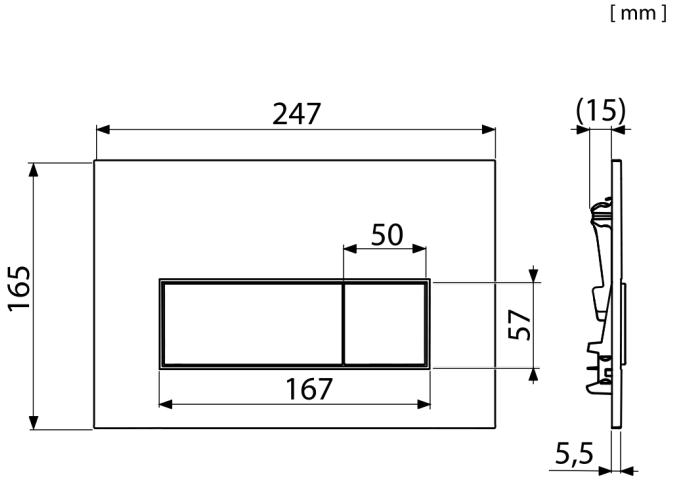

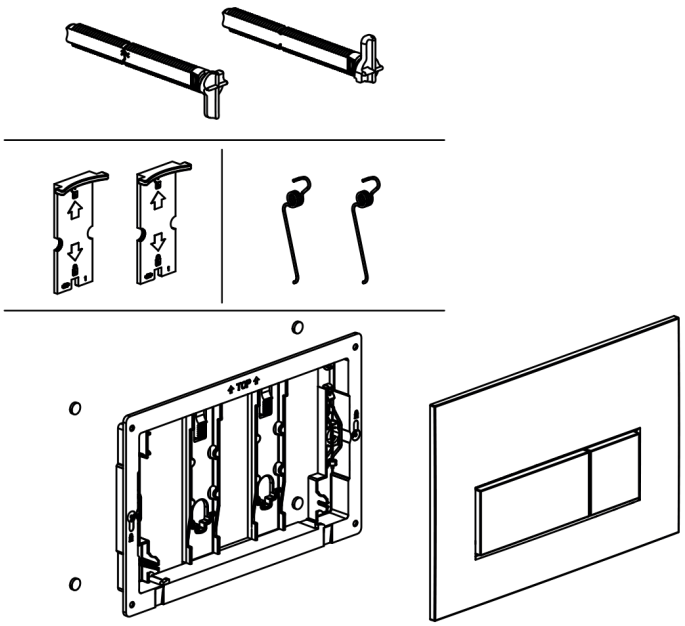

1

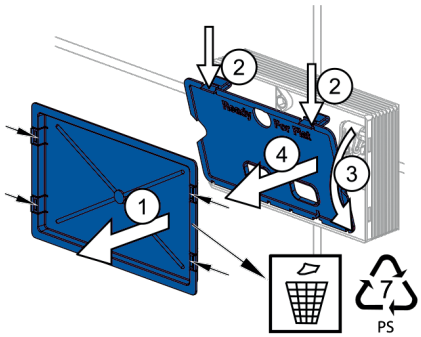

2

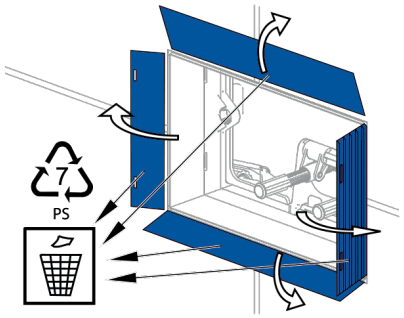

3

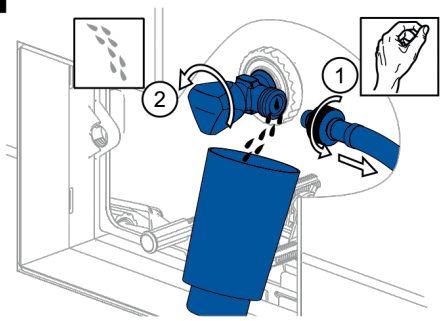

4

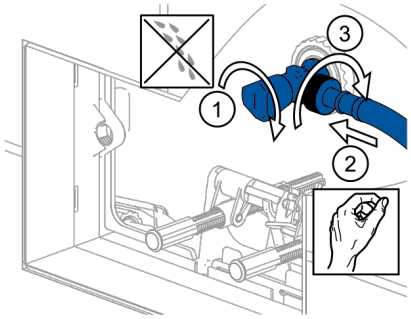

5

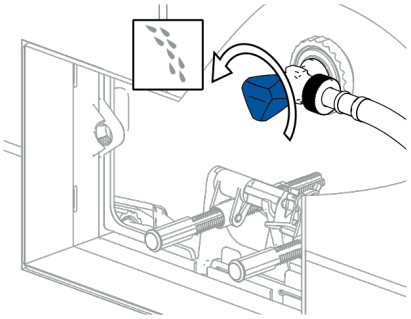

6

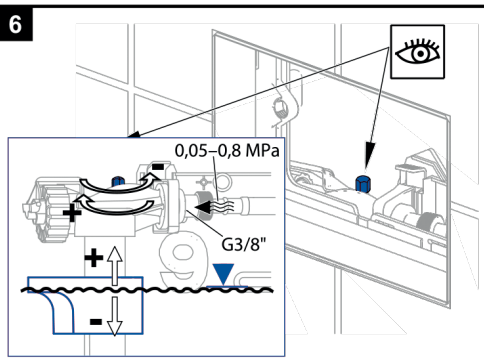

7

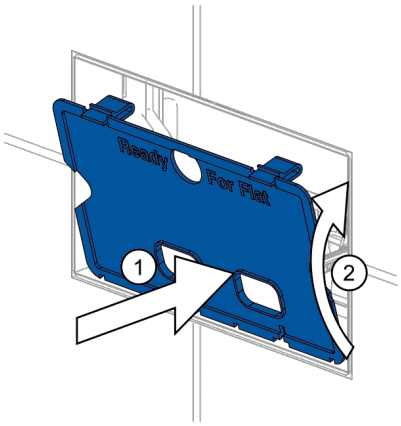

8

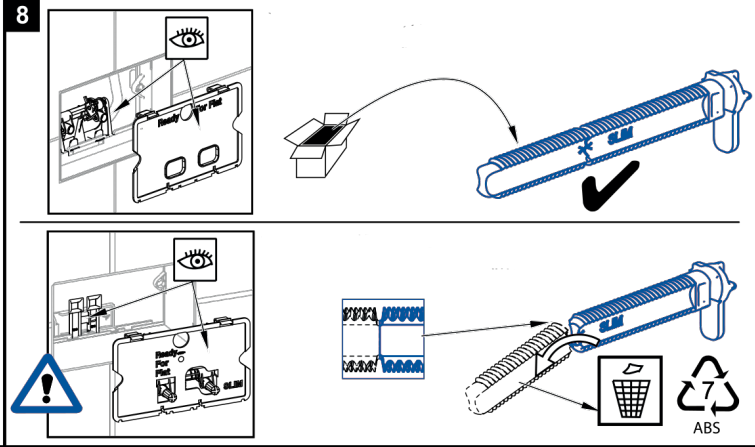

MANUAL INSTRUCTION

deante

9

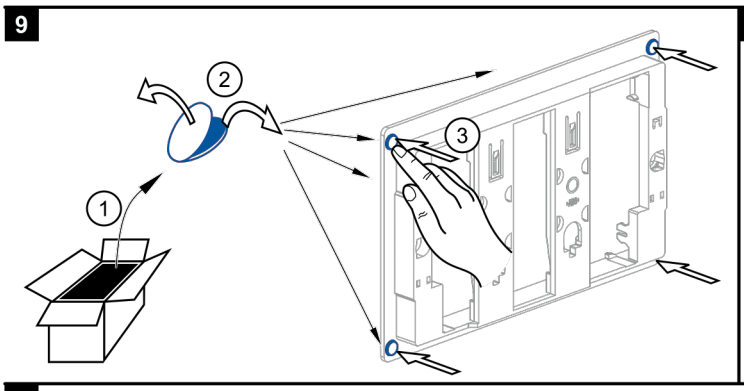

10

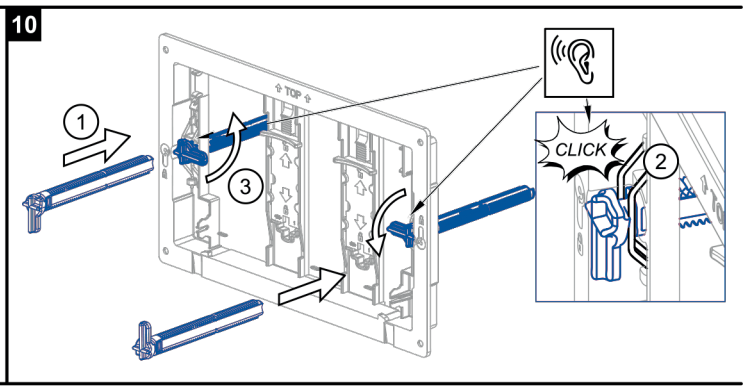

11

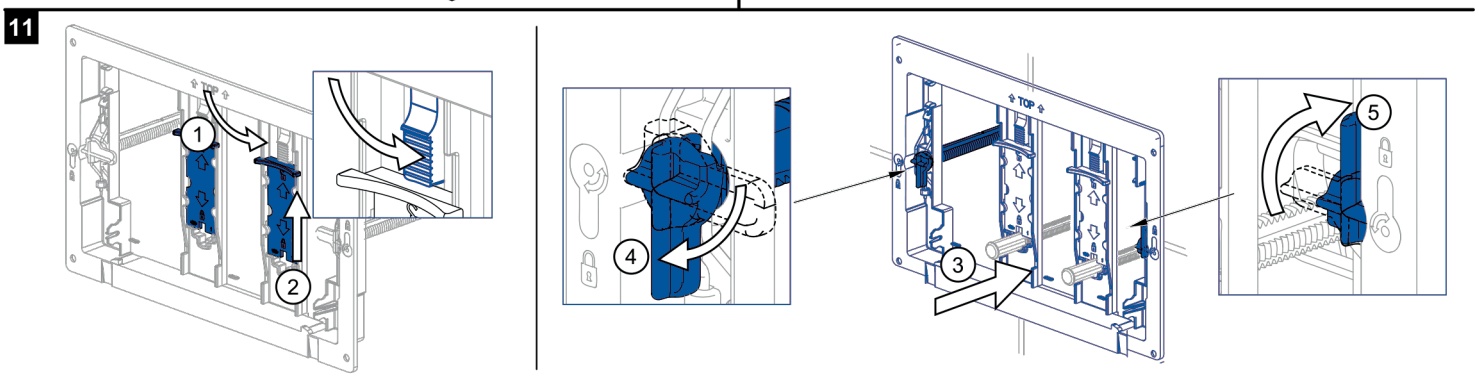

12

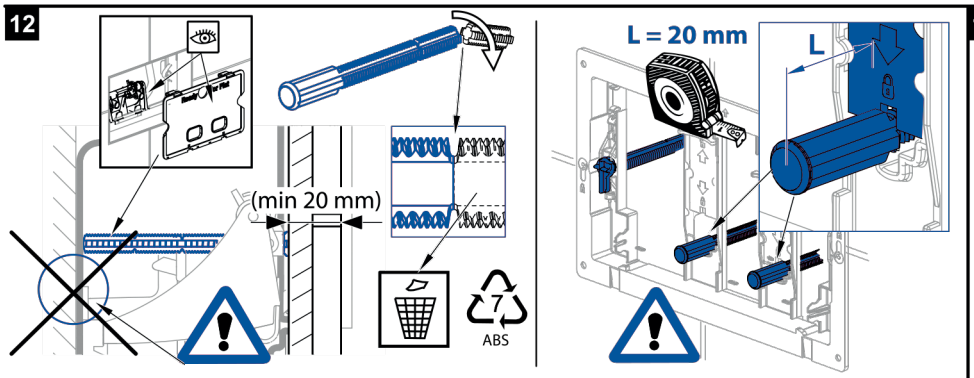

13

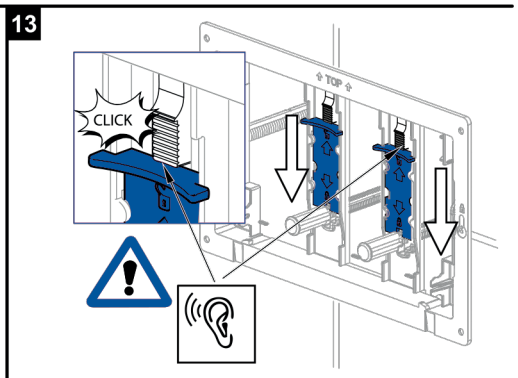

14

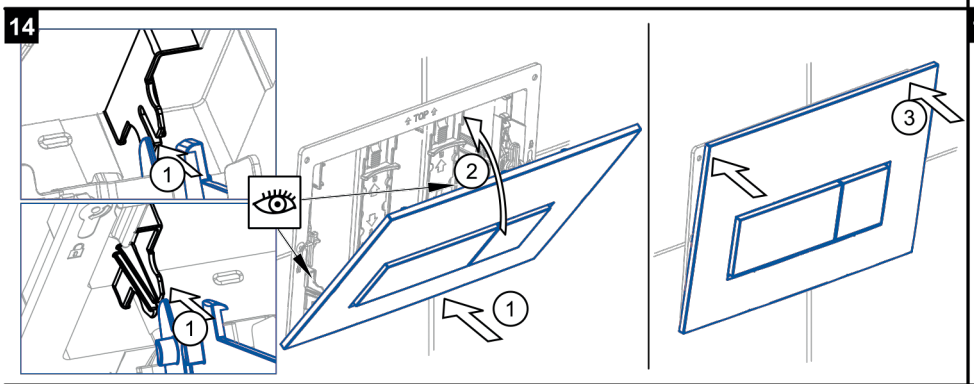

15

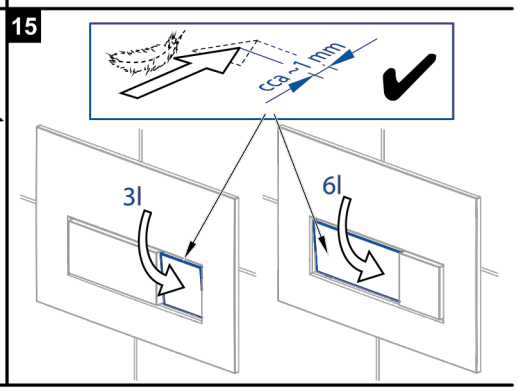

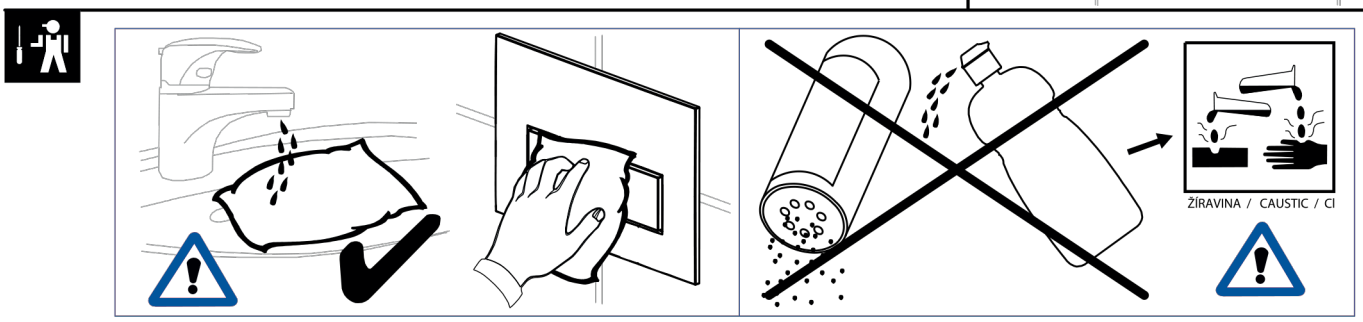

19/01/K0104