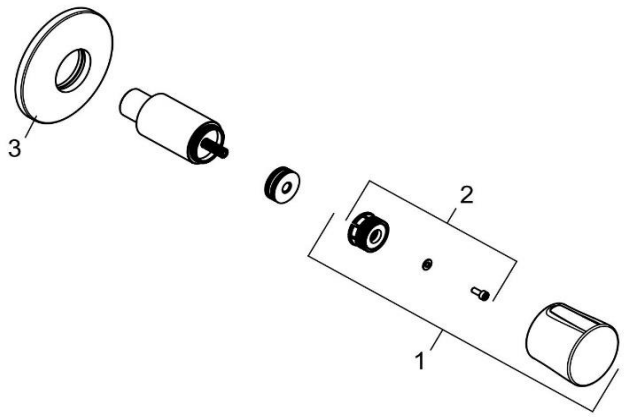

528478775		Zwei-Wege-Umstellung	two-way diverter
1	7309239-00	GRIFF BALANCE	HANDLE BALANCE
2	7472300-00	RASTBUCHSE	HOLD BUSHING
3	7322739-00	UP - ROSETTE	ESCUTCHEON, CONCEALED