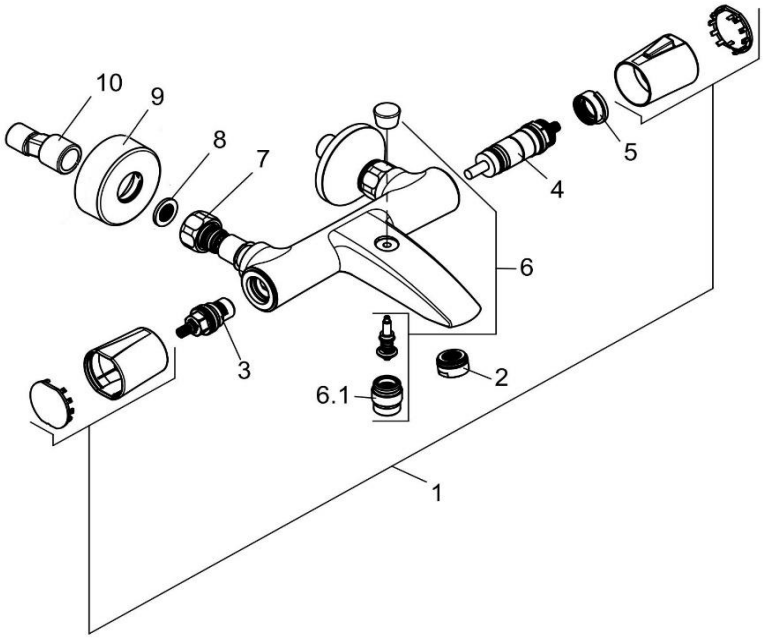

351019138		Unterputz-Wannenfüll- und Brause-Thermostatarmatur	concealed thermostatic bath- and shower mixer
1	7454891-00	GRIFF - SET	HANDLE SET
2	7676405-00	STRAHLREGLER	AERATOR
3	7505400-00	KERAMIK - OBERTEIL	CERAMIC HEAD PART
4	7447000-00	THERMOSTAT	TEMPERATURE CONTROL UNIT
5	93080659-00	JUSTIERBUCHSE	SLEEVE FOR ADJUSTMENT
6	7412391-00	UMSTELLUNG	DIVERTER
6.1	7558205-00	BRAUSEANSCHLUSSNIPPEL	SHOWER CONNECTING NIPPLE
7	7451305-00	WANDARMATURENANSCHLUSS	WALL CONNECTING NIPPLE
8	95502535-00	SCHMUTZFANGSIEB F. THERMOSTAT	FILTER FOR THERMOSTAT MIXER
9	7469891-00	ROSETTE	ESCUTCHEON
10	7655204-00	S - ANSCHLUSS	S - CONNECTIONS