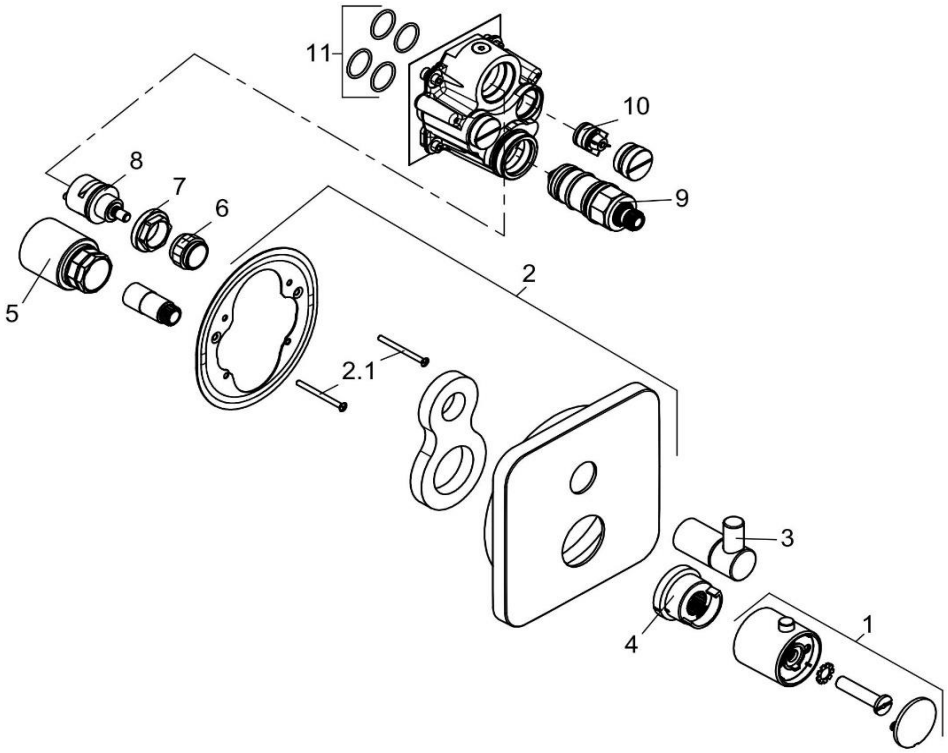

ab 03/18

498350575		Unterputz-Brause-Thermostatarmatur	concealed thermostatic shower mixer
1	7474305-00	THERMOSTATGRIFF	HANDLE FOR THERMOSTAT
2	7321705-00	UP - ROSETTE	ESCUTCHEON, CONCEALED
2.1	7446335-00	SCHRAUBEN SET	SCREW SET
3	7469105-00	UMSTELLGRIFF / ABSPERRGRIFF	DIVERTER HANDLE / SHUT-OFF HANDLE
4	93091406-00	JUSTIERBUCHSE	SLEEVE FOR ADJUSTMENT
5	92029905-00	KOPFSTÜCKVERLÄNGERUNG	EXTENSION FOR HEAD PIECE
6	92241637-00	ADAPTER	ADAPTER
7	92256637-00	SPANNSCHRAUBE	FASTENING SCREW
8	7356537-00	ABSPERRKARTUSCHE	SHUT - OFF CARTRIDGE
9	7639000-00	THERMOSTAT	TEMPERATURE CONTROL UNIT
10	7479700-00	RÜCKFLUSSVERHINDERER	BACK FLOW PREVENTER
11	7301100-00	DICHTUNGSSATZ	SEALING SET

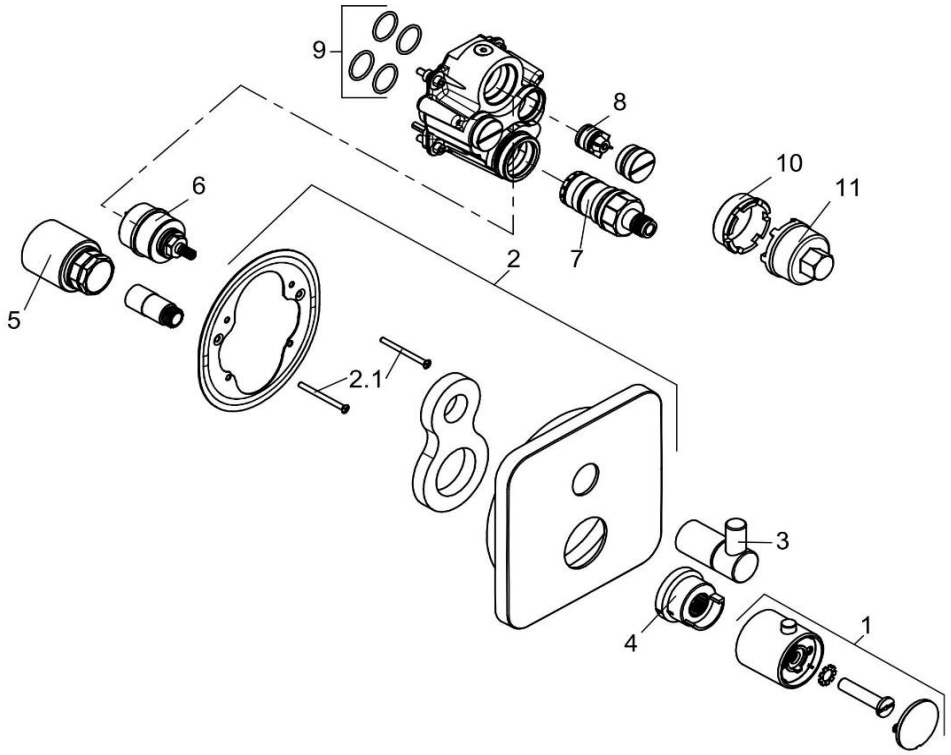

bis 02/18

498350575		Unterputz-Brause-Thermostatarmatur	concealed thermostatic shower mixer
1	7474305-00	THERMOSTATGRIFF	HANDLE FOR THERMOSTAT
2	7321705-00	UP - ROSETTE	ESCUTCHEON, CONCEALED
2.1	7446335-00	SCHRAUBEN SET	SCREW SET
3	7469105-00	UMSTELLGRIFF / ABSPERRGRIFF	DIVERTER HANDLE / SHUT-OFF HANDLE
4	93071506-00	JUSTIERBUCHSE	SLEEVE FOR ADJUSTMENT
5	92029905-00	KOPFSTÜCKVERLÄNGERUNG	EXTENSION FOR HEAD PIECE
6	7813837Z-00	DIVERTER KARTUSCHE	DIVERTER CARTRIDGE
7	7492600-00	THERMOSTAT	TEMPERATURE CONTROL UNIT
8	7479700-00	RÜCKFLUSSVERHINDERER	BACK FLOW PREVENTER
9	7301100-00	DICHTUNGSSATZ	SEALING SET
10	92284337-00	SPANNSCHRAUBE	FASTENING SCREW
11	93086904-00	SPANNSCHRAUBENSCHLÜSSEL	WRENCH FOR FASTENING SCREW