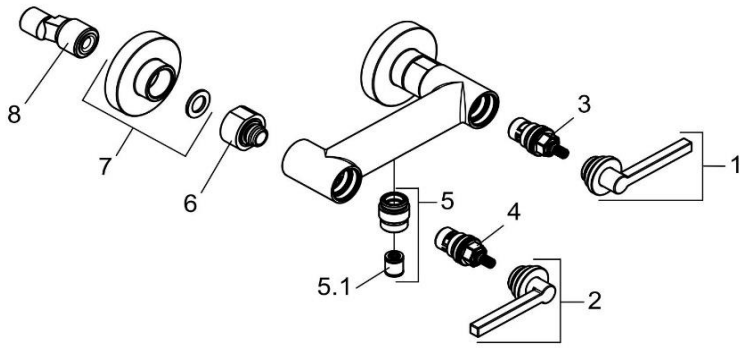

207103915		Brause-Einhandmischer DN 15	single lever shower mixer DN 15
1	7379539-00	GRIFF BLAU - NOVA FONTE	HANDLE BLUE - NOVA FONTE
2	7379639-00	GRIFF ROT - NOVA FONTE	HANDLE RED - NOVA FONTE
3	7383200-00	KERAMIK - OBERTEIL	CERAMIC HEAD PART
4	7371900-00	KERAMIK - OBERTEIL	CERAMIC HEAD PART
5	7578005-00	BRAUSEANSCHLUSSNIPPEL	SHOWER CONNECTING NIPPLE
5.1	7510600-00	RÜCKFLUSSVERHINDERER	BACK FLOW PREVENTER
6	7380439-00	WANDARMATURENANSCHLUSS	WALL CONNECTING NIPPLE
7	7374739-00	ROSETTE	ESCUTCHEON
8	7655100-00	S - ANSCHLUSS	S - CONNECTIONS